56.Engine Wiring Harness and Transmission Cord

A: LOCATION

1. NON-TURBO MODEL

Connector				Connecting to	
No.	Pole	Color	Position	No.	Name
E4	2	Black	A-3		Purge control solenoid valve
E5	2	Dark gray	A-2		Fuel injector No. 1
E6	2	Dark gray	A-2		Fuel injector No. 3
E8	3	Light gray	B-3		Engine coolant temperature sensor, thermometer
E10	2	Light gray	B-3		Crankshaft position sensor
E11	1	—	B-2		Oil pressure switch
E12	4	Dark gray	A-2		Ignition coil and ignitor
E14	2	Gray	A-3		Knock sensor
E15	2	Black	B-4		Camshaft position sensor
E16	2	Dark gray	B-4		Fuel injector No. 2
E17	2	Dark gray	B-4		Fuel injector No. 4
E18	6	Dark gray	A-4		EGR valve
E19	1	★	B-2		Power steering oil pressure switch
E21	3	Black	A-3		Pressure sensor
E35	1	★	B-3		Variable valve lift diagnosis oil pressure switch LH
E36	1	★	A-3		Variable valve lift diagnosis oil pressure switch RH
E37	2	Blue	B-3		Variable valve lift solenoid LH
E38	2	Blue	A-3		Variable valve lift solenoid RH
E57	6	Black	A-3		Electronic throttle control
E100	54	Black	A-4	B21	Bulkhead wiring harness
E117	2	Dark gray	A-3		PCV diagnosis switch
E118	6	Black	A-3		Front oxygen (A/F) sensor
E119	4	Dark gray	A-3		Rear oxygen sensor
E120	2	Black	A-3		Oil temperature sensor
★: White or natural color					

Connector				Connecting to	
No.	Pole	Color	Position	No.	Name
T1	2	Gray	D-2	B24	Bulkhead wiring harness (MT model)
T2	2	Brown	D-2	B25	
T3	12	Black	D-4	B12	Bulkhead wiring harness (AT model)
T4	20	Gray	D-4	B11	
T7	12	Black	D-4		Inhibitor switch (AT model)

Engine Wiring Harness and Transmission Cord

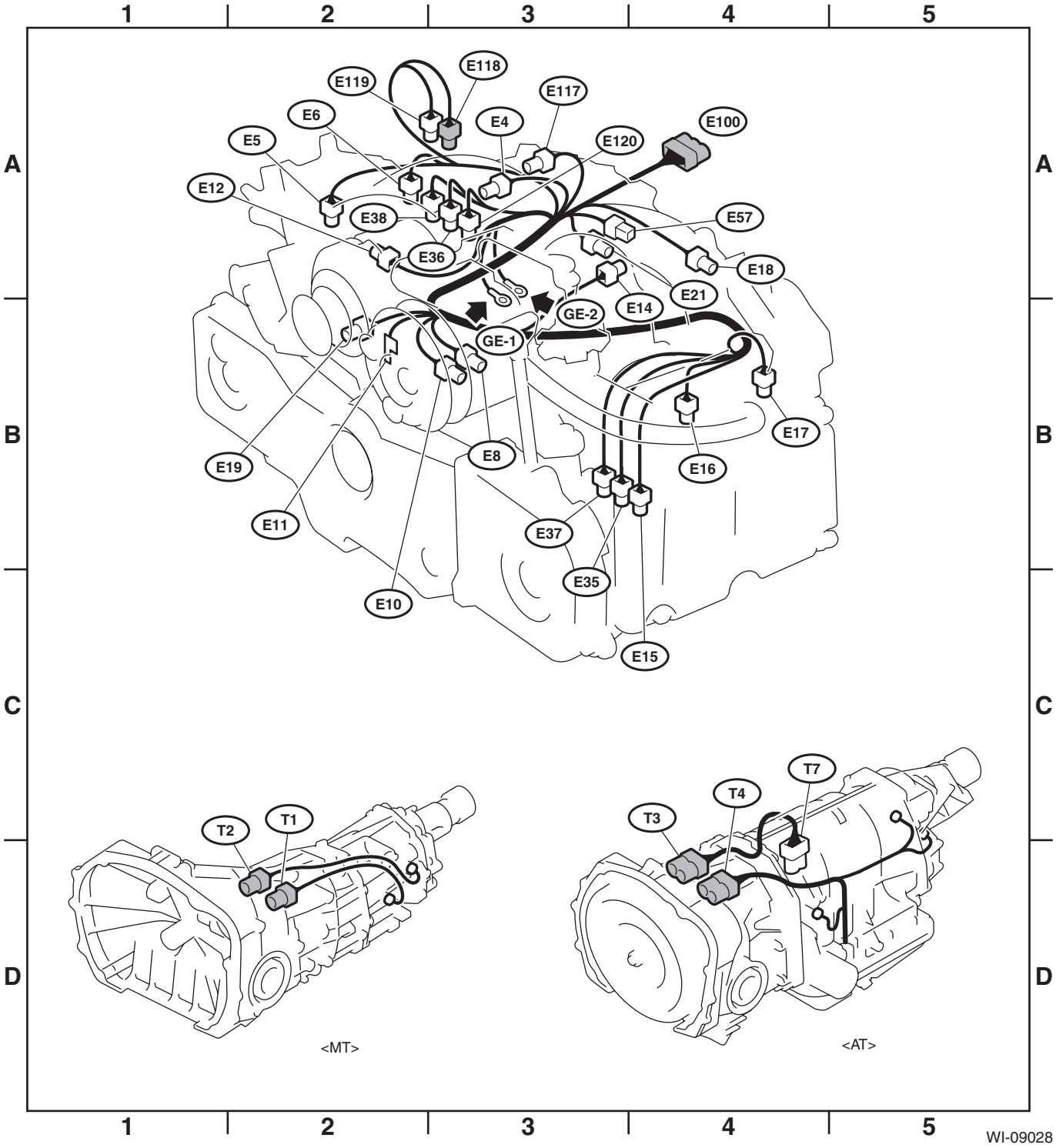

2. TURBO MODEL

Connector				Connecting to	
No.	Pole	Color	Position	No.	Name
E1	16	Brown	A-2	B20	Bulkhead wiring harness
E4	2	Black	B-3		Purge control solenoid valve No. 1
E5	2	Dark gray	A-2		Fuel injector No. 1
E6	2	Dark gray	A-2		Fuel injector No. 3
E8	3	Light gray	B-3		Engine coolant temperature sensor, thermometer
E10	2	Light gray	B-2		Crankshaft position sensor
E11	1	—	B-2		Oil pressure switch
E14	2	Light gray	A-4		Knock sensor
E16	2	Dark gray	B-4		Fuel injector No. 2
E17	2	Dark gray	B-4		Fuel injector No. 4
E19	1	★	B-3		Power steering oil pressure switch
E21	3	Black	A-3		Pressure sensor
E31	3	★	B-2		Ignition coil No. 1
E32	3	★	B-4		Ignition coil No. 2
E33	3	Black	A-3		Ignition coil No. 3
E34	3	Black	B-4		Ignition coil No. 4
E35	3	Light gray	B-4		AVCS camshaft position sensor LH
E36	3	Light gray	A-3		AVCS camshaft position sensor RH
E37	2	Blue	B-4		AVCS solenoid valve LH
E38	2	Blue	A-2		AVCS solenoid valve RH
E50	3	Black	B-3		Tumble generator valve position sensor LH
E51	2	Black	A-4		Tumble generator valve LH
E52	2	Black	B-3		Purge control solenoid valve No. 2
E54	3	Black	A-3		Tumble generator valve position sensor RH
E55	2	Black	A-2		Tumble generator valve RH
E57	6	Black	A-3		Electronic throttle control
E61	2	Dark gray	A-3		PCV diagnosis connector
E100	54	Black	A-3	B21	Bulkhead wiring harness
E115	2	Black	B-4		Secondary air combination cut valve RH
E116	6	Black	B-4		Secondary air combination cut valve LH
★: White or natural color					

Connector				Connecting to	
No.	Pole	Color	Position	No.	Name
T1	2	Gray	D-3	T13	Transmission cord (MT model)
T2	2	Brown	D-3	T12	
T3	12	Black	D-4	B12	Bulkhead wiring harness (AT model)
T4	20	Gray	D-4	B11	
T5	4	Gray	C-1	B19	Bulkhead wiring harness (MT model)
			C-4		Bulkhead wiring harness (AT model)
T6	4	Gray	D-3		Rear oxygen sensor (MT model)
			D-5		Rear oxygen sensor (AT model)
T7	12	Black	D-4		Inhibitor switch (AT model)
T9	4	Gray	D-2	B128	Bulkhead wiring harness (MT model)
T12	2	Brown	D-3	T2	Neutral position switch (MT model)
T13	2	Gray	D-3	T1	Back-up light switch (MT model)

Engine Wiring Harness and Transmission Cord

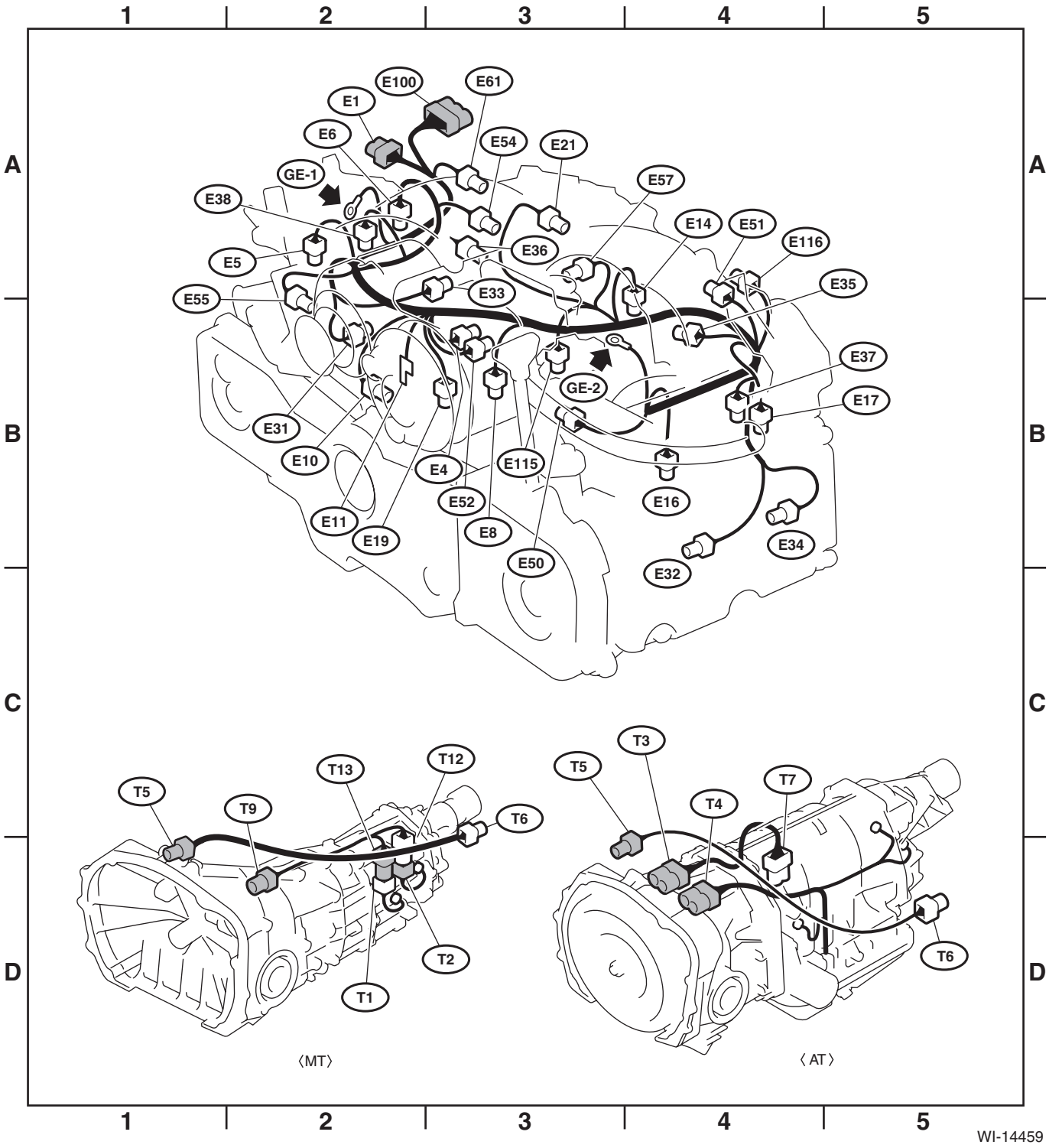

3. STI MODEL

Connector				Connecting to	
No.	Pole	Color	Position	No.	Name
E1	16	Brown	A-2	B20	Bulkhead wiring harness
E4	2	Black	B-3		Purge control solenoid valve No. 1
E5	2	Dark gray	A-2		Fuel injector No. 1
E6	2	Dark gray	A-2		Fuel injector No. 3
E8	3	Light gray	B-3		Engine coolant temperature sensor, thermometer
E10	2	Light gray	B-2		Crankshaft position sensor
E11	1	—	B-2		Oil pressure switch
E14	2	Light gray	A-4		Knock sensor
E16	2	Dark gray	B-4		Fuel injector No. 2
E17	2	Dark gray	B-4		Fuel injector No. 4
E19	1	★	B-3		Power steering oil pressure switch
E21	3	Black	A-3		Pressure sensor
E31	3	★	B-2		Ignition coil No. 1
E32	3	★	B-4		Ignition coil No. 2
E33	3	Black	A-3		Ignition coil No. 3
E34	3	Black	B-4		Ignition coil No. 4
E35	3	Light gray	B-4		AVCS camshaft position sensor LH
E36	3	Light gray	A-3		AVCS camshaft position sensor RH
E37	2	Blue	B-4		AVCS solenoid valve LH
E38	2	Blue	A-2		AVCS solenoid valve RH
E52	2	Black	B-3		Purge control solenoid valve No. 2
E57	6	Black	A-3		Electronic throttle control
E61	2	Dark gray	A-3		PCV diagnosis connector
E80	5	Black	A-4		Tumble generator valve and position sensor LH
E81	5	Black	A-2		Tumble generator valve and position sensor RH
E100	54	Black	A-3	B21	Bulkhead wiring harness
E116	6	Black	A-4		Secondary air combination cut valve LH
★: White or natural color					

Connector				Connecting to	
No.	Pole	Color	Position	No.	Name
T1	2	★	D-4	T13	Transmission cord
T2	2	Black	D-4	T12	
T5	4	Gray	C-2	B19	Bulkhead wiring harness
T6	4	Gray	D-4		Rear oxygen sensor
T9	6	Gray	D-3	B128	Bulkhead wiring harness
T12	2	Black	D-4	T2	Neutral position switch
T13	2	★	D-4	T1	Back-up light switch
★: White or natural color					
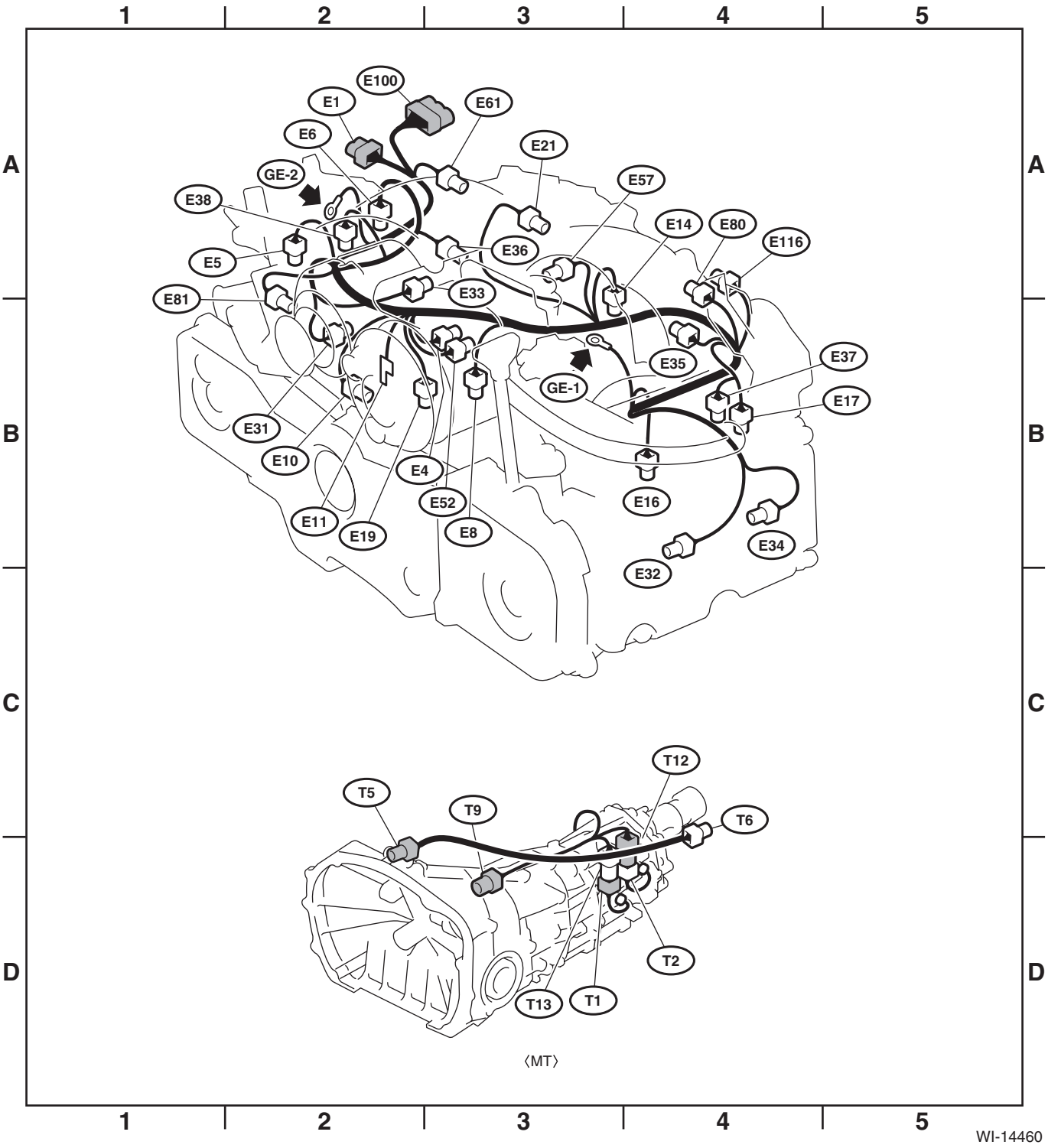
Engine Wiring Harness and Transmission Cord